NOREQ FRB 700
In aluminium

Ergonomically designed

Sharp forefoot

in combination with a trim angle, gives the boat outstanding stability and sea characteristics.

Produced in aluminium

Strong, durable and low maintenance.

Light weight, multi functional and durable.

The NOREQ FRB 700 is a completely new rescue boat made of aluminium, with improved functionality and user friendliness. The boat can be used both as a rescue boat and as a work boat for small jobs. NOREQ FRB 700 is able to withstand more punishment, heavier use and tougher working conditions than ordinary boats of this type made of fibre-glass.

The hull is designed for speed and stability, which means optimal working conditions on the vessel in rough sea conditions. The NOREQ FRB 700 can move at speeds of up to 35 knots and comes with an inboard diesel engine with waterjet propulsion. This new and improved rescue boat is the result of feedback from our customers and Noreq's experience as a manufacturer of life-saving equipment.

NOREQ®
Based on experience

Features

- Strong, welded, shot blasted and fully recyclable and strengthened aluminium hull.
- Free-draining deck.
- Robust, Impact resistant and Fire-retardant fender.
- Ergonomically designed cockpit.
- Complete aluminium capsize reversal system.
- Single-point lifting frame with off load release hook.
- Bukh/Steyr inboard diesel engine in combination with Alamarine water jet.
- Variations in application, dimensions, fabric and propulsion are being designed.

Technical specifications and data

- NOREQ FRB 700 is designed and manufactured in accordance with the latest international SOLAS regulations and approvals from all appropriate maritime authorities and classification societies.
- The design of the evolutionary hull and the method of construction have resulted in an extremely strong, self-bailing and unsinkable boat that is well suited to the environment.
- A distinctive deep, sharp forefoot has been selected, in combination with a trim angle, in order to create the right balance between the reduction of slamming and dynamic stability.
- In combination with its heavy-duty foam fender, this means long-term, inherent reliability and minimal maintenance costs.
- The NOREQ FRB 700 will be available in combination with dedicated davit systems and all the life-saving equipment required for safe operation.

Boat data:

Number of persons	: 15 maximum
Weight, empty boat	: 1800 kg
Weight, davit load	: 2800 kg (10 persons @ 100kg)
Standard propulsion	: Water jet Alamarine 230
Model	: BUKH STEYR 236 (alternatives available)
Speed	: 34 knots w/3 persons
Towing force	: > 700 kg
Lifting arrangement	: Off load release hook, SWL 3.5T

Dimension:
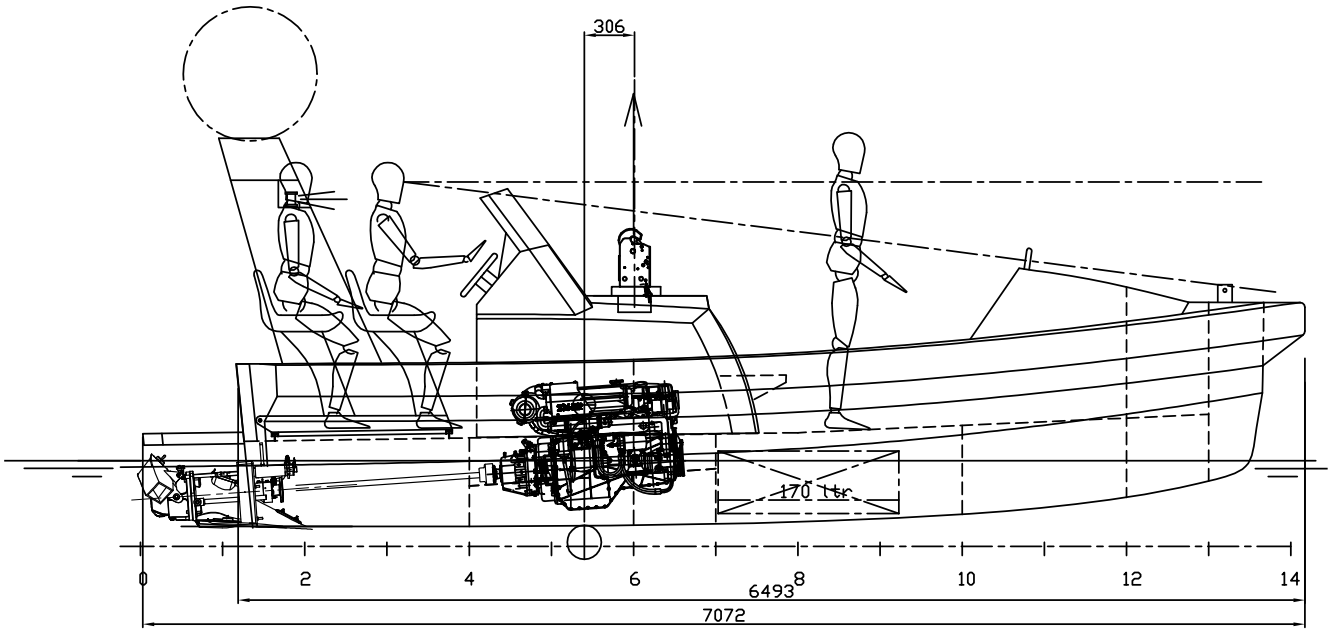
LOA	: 7.00 m
WOA	: 2.65 m
HOA	: 2.46 m